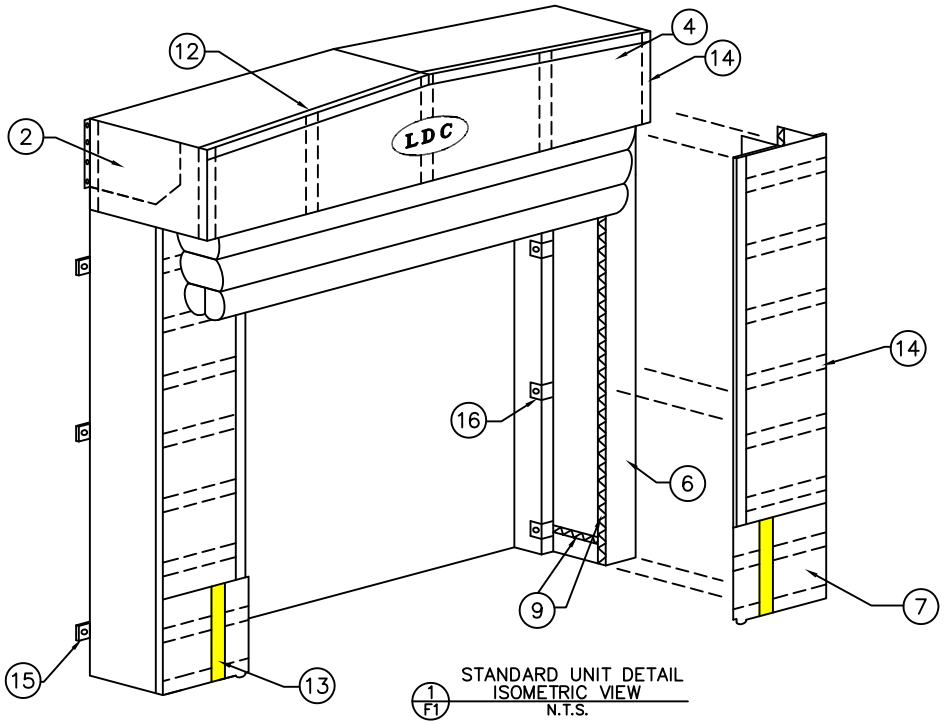

1 F1 STANDARD UNIT DETAIL ISOMETRIC VIEW N.T.S.

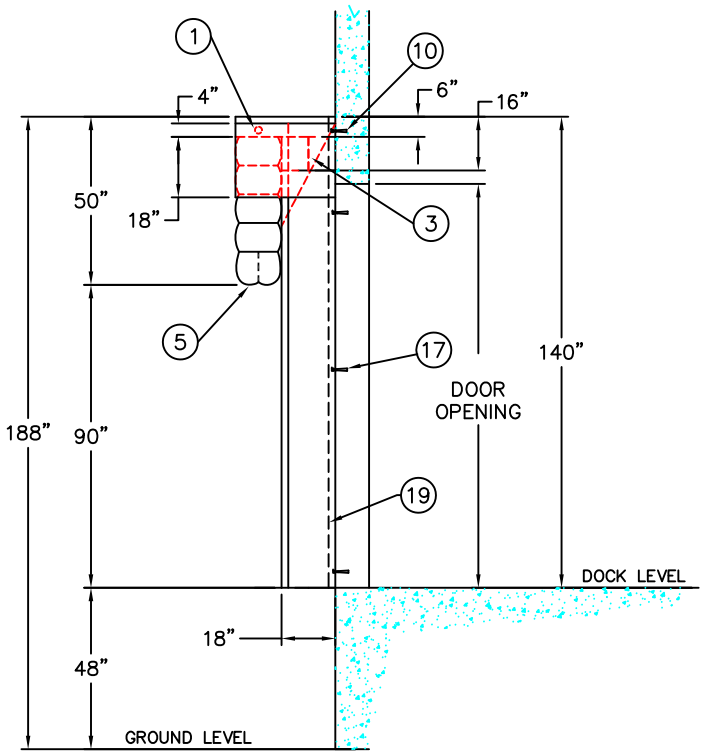

2 F1 STANDARD UNIT DETAIL SIDE VIEW SCALE: 1" = 1'-0"

No.	DESCRIPTION
1	TORSION SPRING EXTERIOR ADJUSTMENT
2	GALVANIZED STEEL SIDE SUPPORT
3	HEAD BAG RETRACTION CORD
4	STORAGE CURTAIN
5	HEADER AIR BAG
6	VERTICAL – BASE PAD
7	REMOVABLE FACE CURTAIN
8	MOTOR / BLOWER 0.5 HP, 1 Ph., 115/230 V, 50/60 Hz, 1420–1600 RPM, 5.5–2.8 A
9	VELCRO ATTATCHMENTS
10	3/8" X 3" SLEEVE ANCHORS
11	TORSION SPRING
12	GALVANIZED TRIM ANGLE
13	4" X 24" YELLOW GUIDE STRIPE
14	CURTAIN STIFFENER
15	FLAT BRACKETS
16	ANGLE BRACKETS
17	3/8" x 1 7/8" SLEEVE ANCHORS
18	FOAM DRAFT PAD
19	WOOD BACK BOARD – KILN DRIED

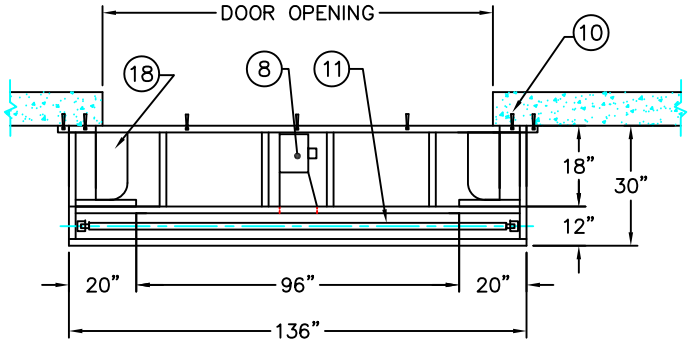

3 F1 STANDARD UNIT DETAIL PLAN VIEW SCALE: 1" = 1'-0"

NOTES: 1) ALL DIMENSIONS ARE STANDARD AND IN IMPERIAL SYSTEM.
2) UNITS CAN BE MANUFACTURED TO SUIT.
3) DRAWINGS NOT TO BE SCALED.

REV.#	DATE	DESCRIPTION	C.P BY
1			

LDC

SERIES	D850		
TITLE:	ADJUSTABLE INFLATABLE HEADER WITH REMOVABLE CURTAIN		
DISTRIBUTED BY			
DATE: 02/20/08	SHEET OF	DWG.# D850	REV. 0