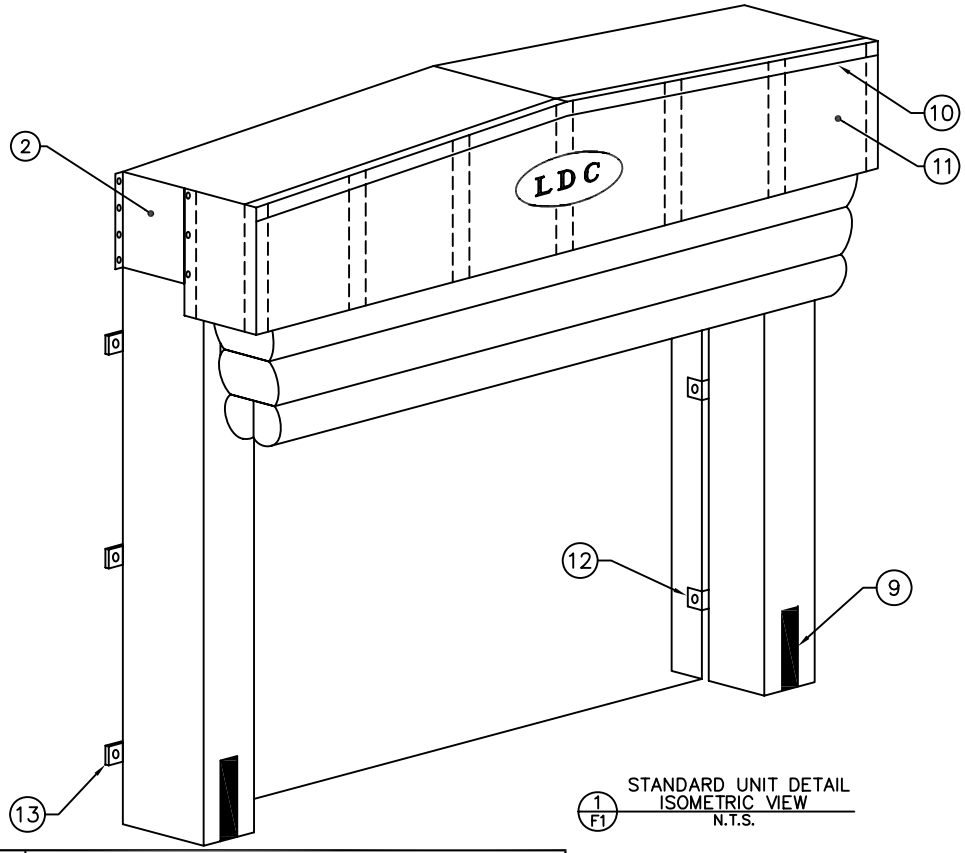

1 F1 STANDARD UNIT DETAIL
ISOMETRIC VIEW
N.T.S.

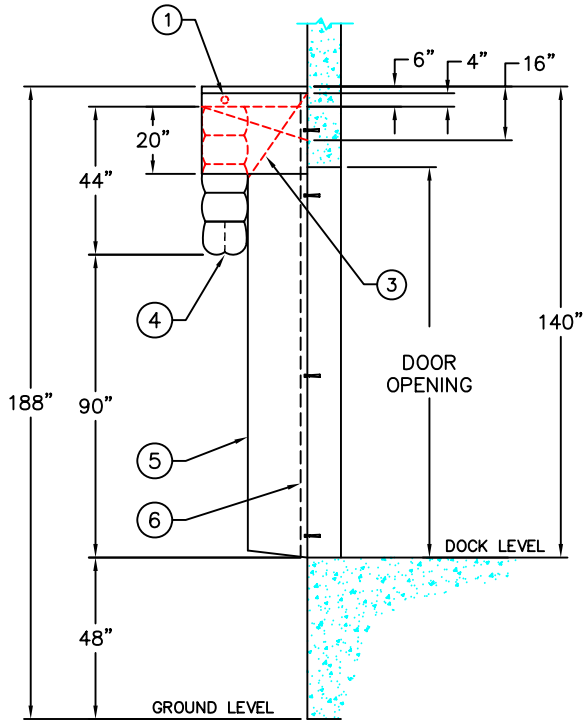

2 F1 STANDARD UNIT DETAIL
SIDE VIEW
SCALE: 1" = 1'-0"

No.	DESCRIPTION
1	EXTERIOR RETRACTION ADJUSTMENT
2	GALVANIZED SIDE SUPPORT
3	HEAD BAG STABILIZER
4	HEAD BAG
5	VERTICAL FOAM PAD
6	2" x 10" WOOD BACKBOARD
7	MOTOR / BLOWER (1/12 HP, 1 Ph., 115 V, 60 Hz, 1550 RPM, 2.4 A)
8	HEAD BAG RETRACTION SYSTEM
9	4" x 24" YELLOW GUIDE STRIPE
10	TRIM ANGLE
11	STORAGE CURTAIN
12	ANGLE BRACKETS
13	FLAT BRACKETS

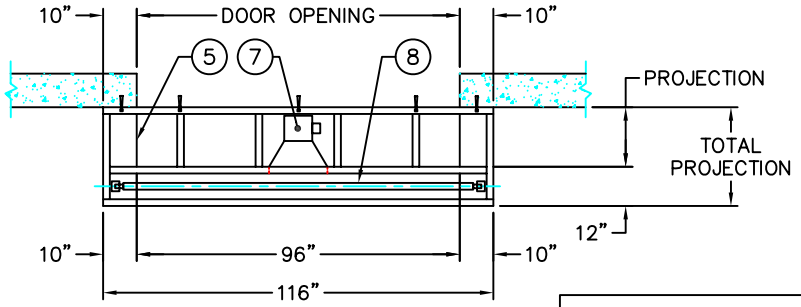

3 F1 STANDARD UNIT DETAIL
PLAN VIEW
SCALE: 1" = 1'-0"

STANDARD PROJECTIONS ARE:
14", 18", 22"

NOTES:
1) ALL DIMENSIONS ARE STANDARD AND IN IMPERIAL SYSTEM.
2) UNITS CAN BE MANUFACTURED TO SUIT.
3) DRAWINGS NOT TO BE SCALED.

REV.#	DATE	DESCRIPTION	BY
1			

LDC

SERIES	D325		
TITLE:	ADJUSTABLE HEADER INFLATABLE SEAL		
DISTRIBUTED BY			
DATE: 06/25/07	SHEET OF	DWG.# D325	REV. 0